445-4-2Y SPIDER

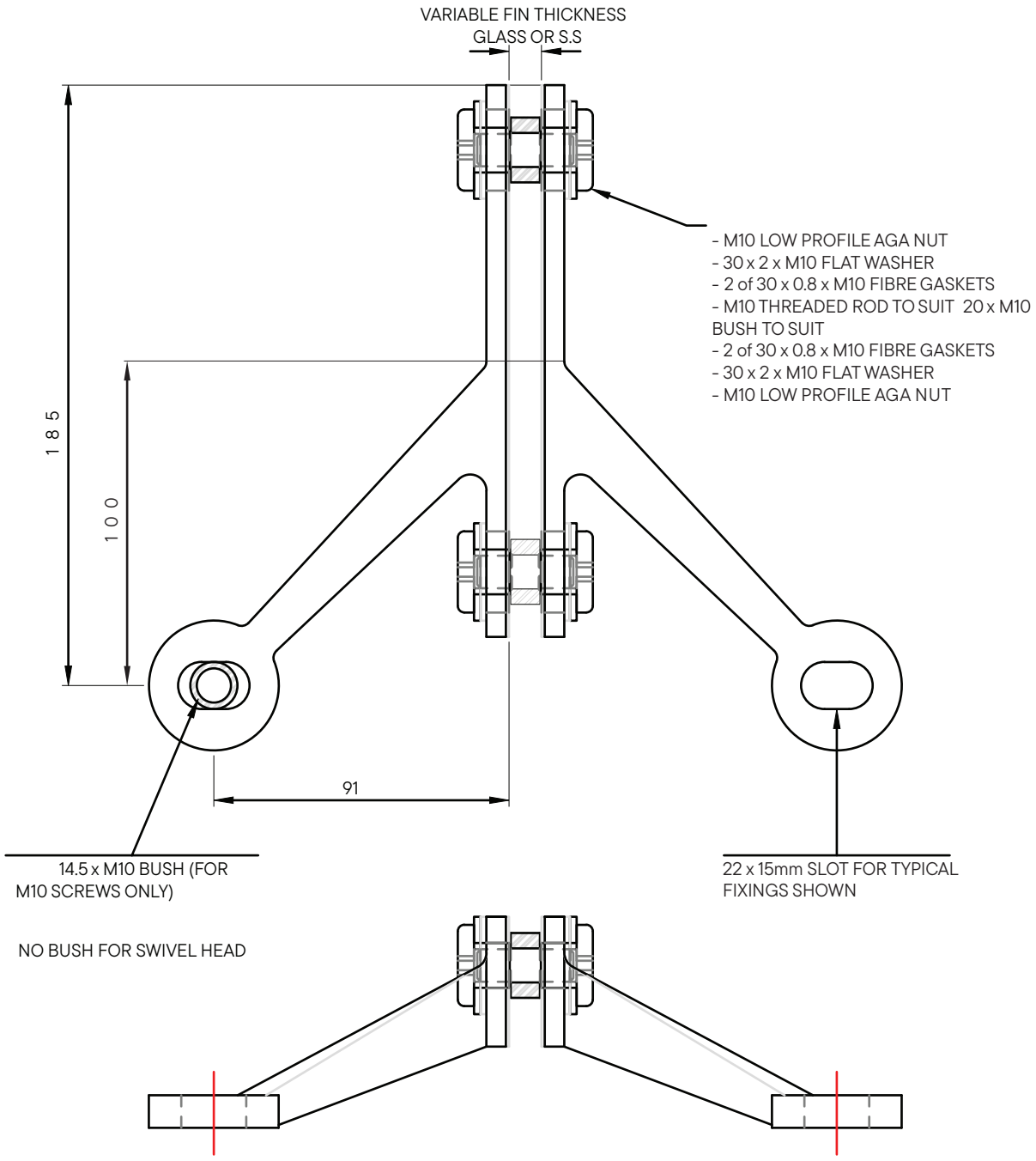

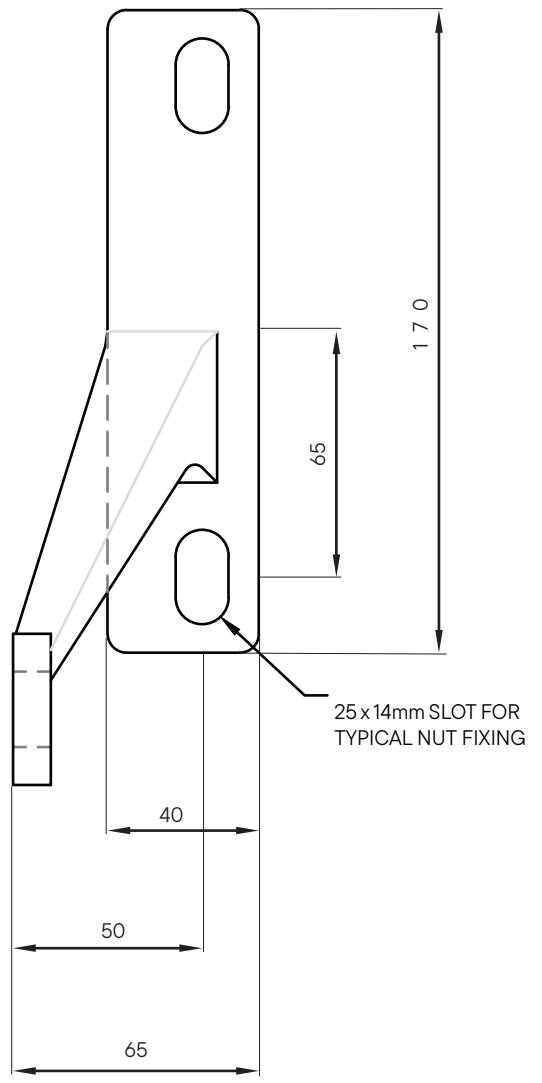

TYPICAL GLASS FIXING OPTIONS:

M10 CSK SCREW & RA DISC

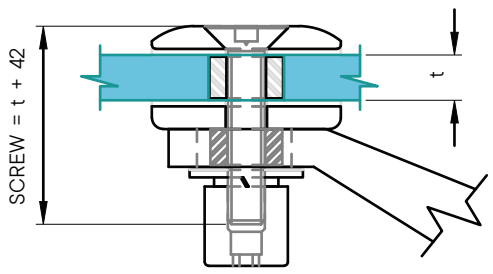

- M10 AGA NUT
- M10 SPRING WASHER
- 30 x 2 x M10 FLAT WASHER
- 30 x 0.8 x M10 FIBRE/PLASTIC GASKET
- M10 BUSH TO SUIT SPIDER PALM
- 445 SPIDER PALM
- 50 x 6mm DISC
- 50 x 0.8 x M10 FIBRE/PLASTIC GASKET
- 19.5 x 10.5 BUSH SUIT GLASS THICKNESS
- 50 x 0.8 x M10 FIBRE/PLASTIC GASKET
- 50 x 6 x M10 RA DISC

60/22-22n SWIVEL

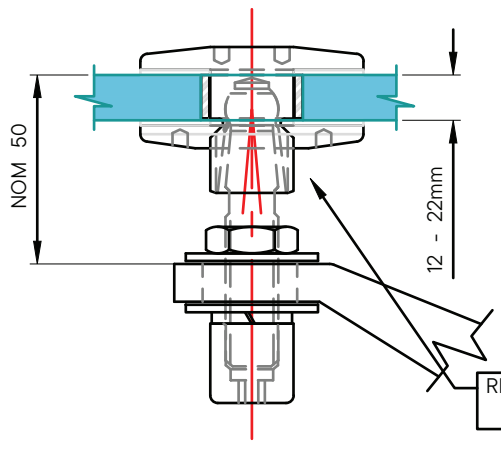

- M14 AGA NUT
- M14 SPRING WASHER
- 35 x 2 x M14 FLAT WASHER
- 35 x 0.8 x M14 FIBRE/ PLASTIC GASKET
- M14 BUSH TO SUIT SPIDER PALM
- 445 SPIDER PALM
- 35 x 0.8 x M14 FIBRE/PLASTIC GASKET
- 35 x 2 x M14 FLAT WASHER
- M14 NUT
- 60/22/22n SPIDER FITTING INCLUDES BUSH TO SUIT GLASS THICKNESS & WASHERS/GASKETS TO GLASS SURFACES

60/22-42n SWIVEL

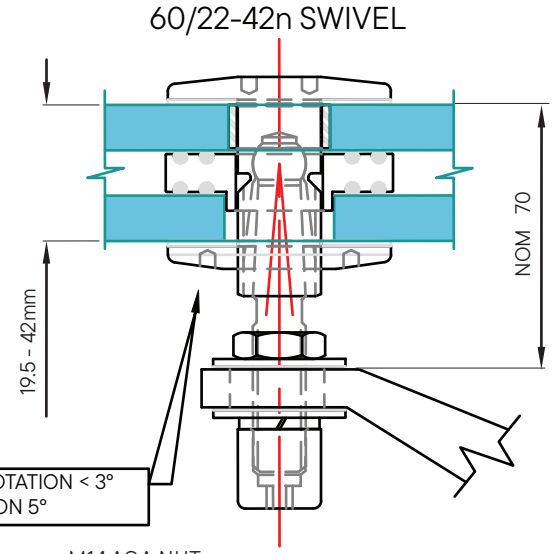

- M14 AGA NUT
- M14 SPRING WASHER
- 35 x 2 x M14 FLAT WASHER
- 35 x 0.8 x M14 FIBRE/PLASTIC GASKET
- M14 BUSH TO SUIT SPIDER PALM
- 445 SPIDER PALM
- 35 x 0.8 x M14 FIBRE/ PLASTIC GASKET
- 35 x 2 x M14 FLAT WASHER
- M14 NUT
- 60/22/42n SPIDER FITTING, INCLUDES BUSH TO SUIT GLASS THICKNESS & WASHERS/ GASKETS TO GLASS SURFACES
- CUSTOM IGU SPACER (TO SUIT IGU, TESTING MAY BE REQUIRED)

HOLE DETAILS FOR TOUGHENED GLASS:

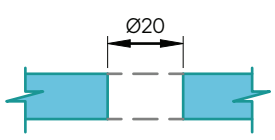

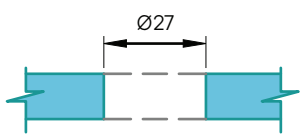

NOTE: HOLE DETAILS FOR TOUGHENED LAMINATED GLASS ARE PROJECT SPECIFIC. CONTACT OPUS HARDWARE FOR DETAILS

HOLE DETAILS FOR IGU :

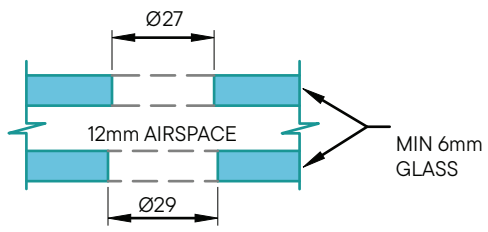

THIS DOCUMENT IS THE PROPERTY OF OPUS HARDWARE. IT MUST NOT BE COPIED NOR THE CONTENTS PASSED ON TO ANY THIRD PARTY WITH-OUT THE CONSENT OF THE COMPANY.

OPUS HARDWARE 445 SERIES
HEAVY DUTY SPIDER

Sheet name:

445-4-2Y HEAVY DUTY SPIDER

Scale:	Dwg no:	Revision:
1:2 @ A3	445-4-2Y	B

www.opushardware.com